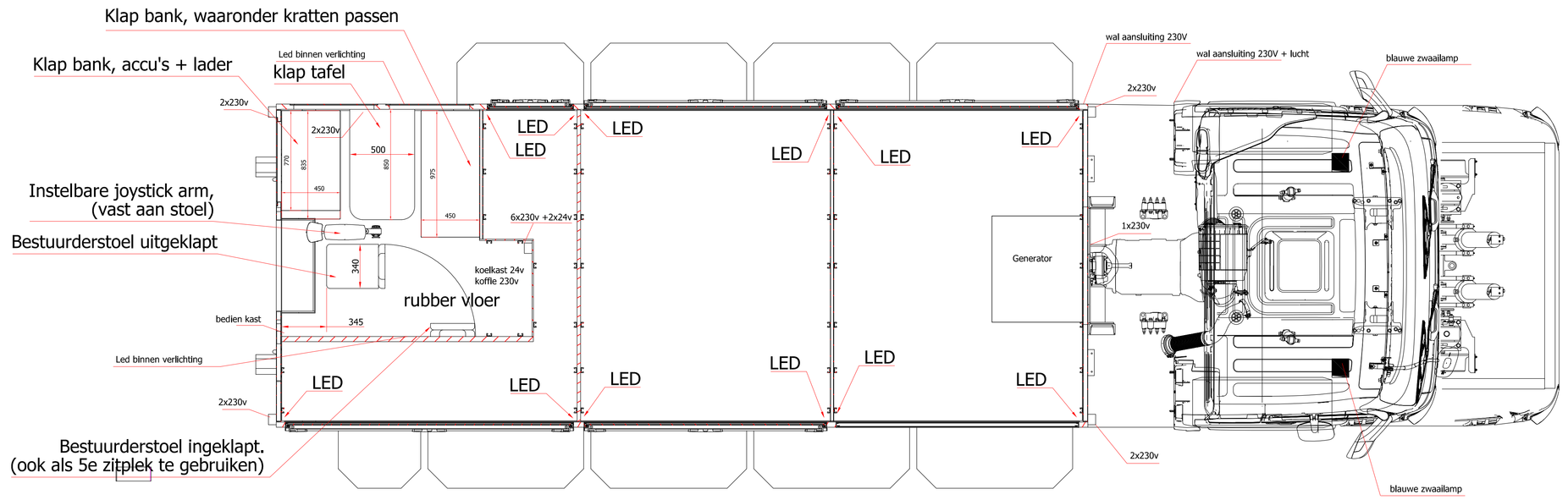

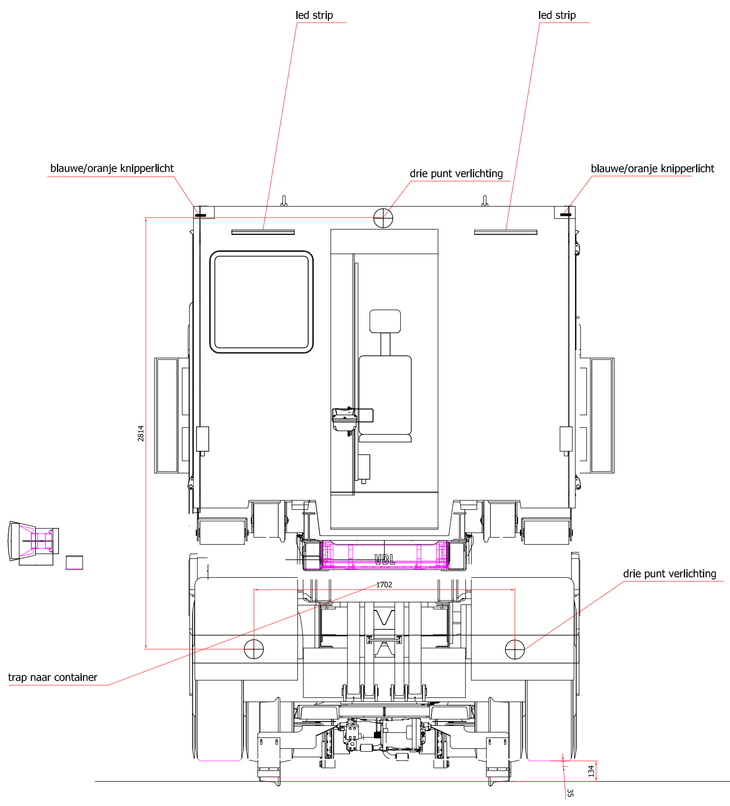

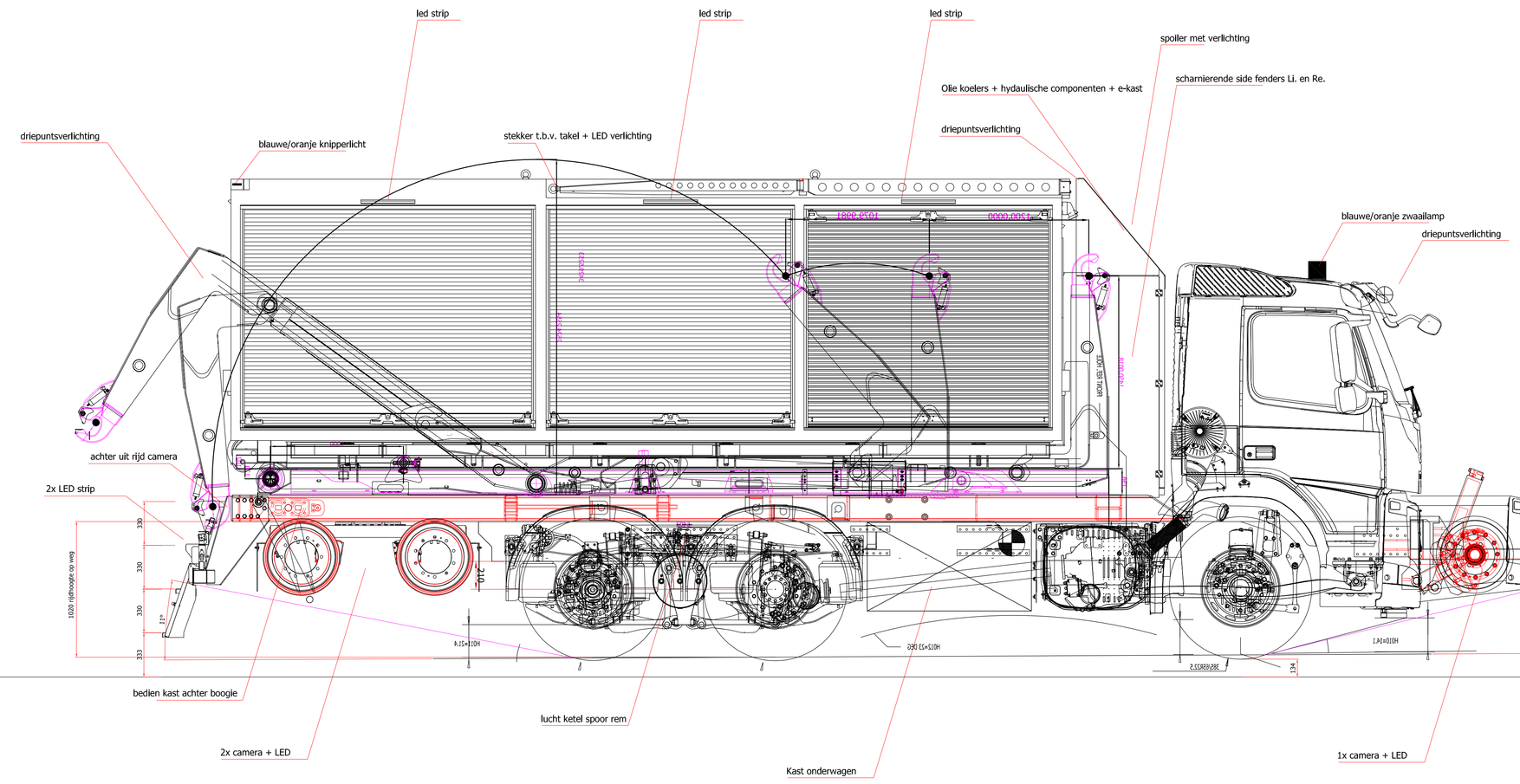

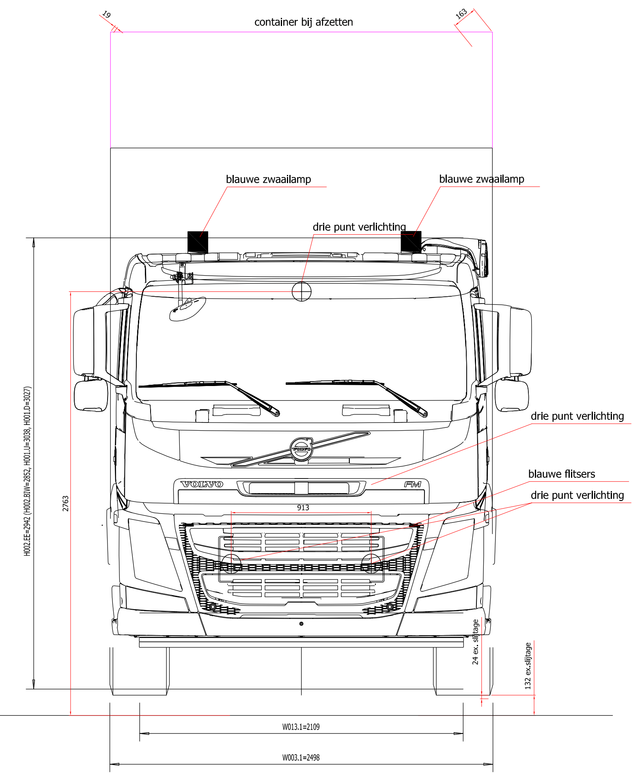

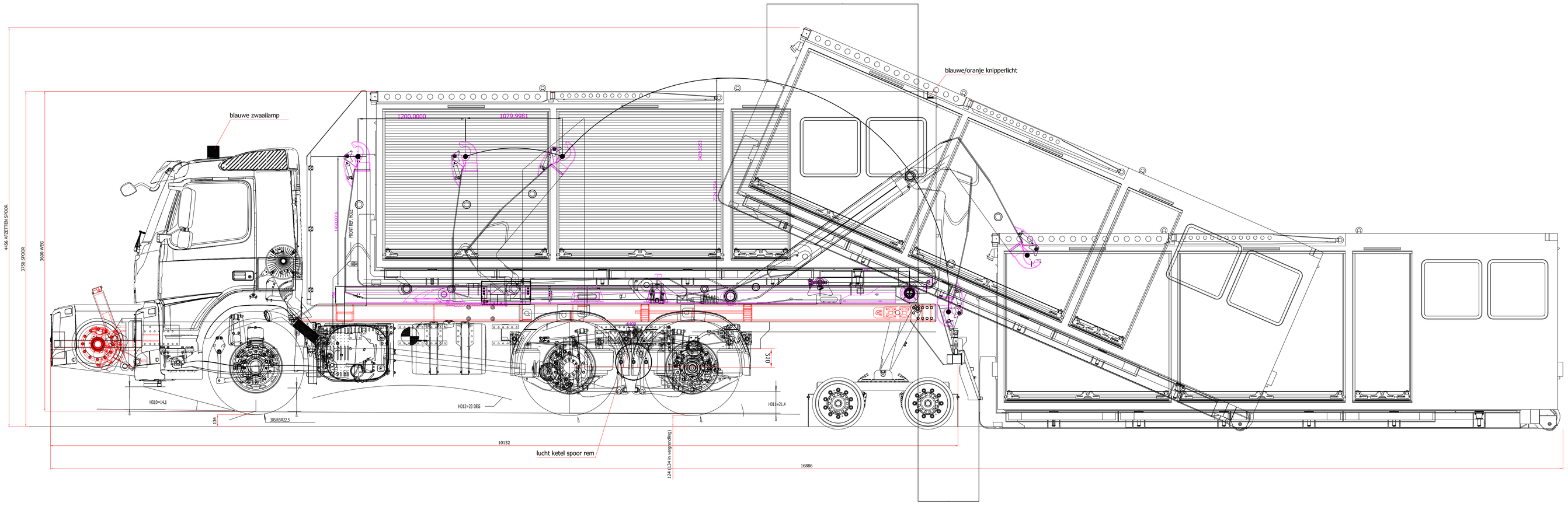

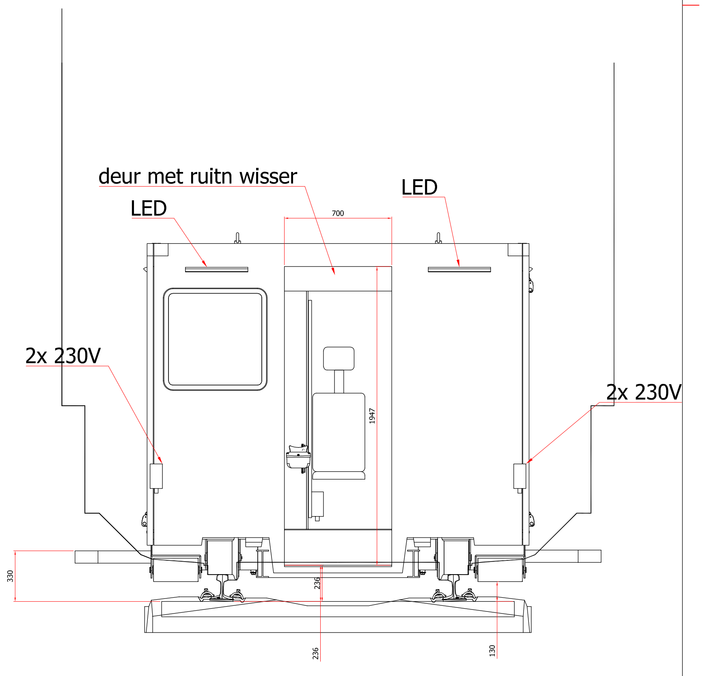

Scale: See View(s)	Projection	By ISO 1101	Unless otherwise specified: (in mm)
Drawn: JL			Welding dimensions 1 - 500 tol. ± 1.0 mm; >500 - ∞ tol. ± 2.0 mm
Checked:			Machining dimensions 1 - 250 tol. ± 0.1 mm; >250 - 500 tol. ± 0.2 mm; >500 - ∞ tol. ± 0.5 mm
Date: 13-11-2014	ISO 1302	Dimension Tol.	
Do not scale	Ra: µm	By ISO 1660	

TITLE: Rijtoestand contract tekening

Remarks: N/A

HILTON ENGINEERING B.V.

Copyright by law ©

info@hiltonengineering.nl

Size:	Drawing No:	Rev.
A0	5143-00	E